EC-LM-BOL8X3-20W

Multifamily Darksky Bollard

EVERGREEN LIGHTING

MADE IN USA

BOLLARD

Meets all BAA and BABA Made in USA Requirements

Darksky Rectangular Cutoff Bollard Design with Directional LED components for Downlight only. Mulitple sizes available to your projects specific needs. Designed for effective lighting of landscapes, pathways, and open spaces. Continuing with Evergreens promise to make all products out of the highest quality American Made Materials for All Industries.

Physical Data

Width - 8"

Height - 32"

Weight - 20 lbs

IP65 Suitable For Wet Locations

Impact Resistant (Vandal Resistant)

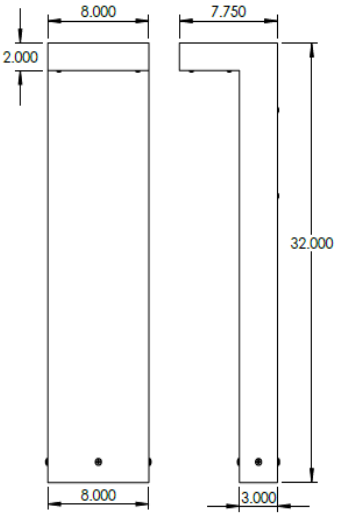

Inside Anchor Base Mounting Detail

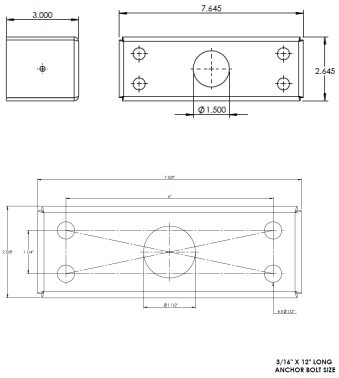

Zoom Template to 600%

Extruded Aluminum
Extruded Aluminum Tube 6061from USA Mills. Diecut, Capped and welded for maximum strength and durability. 1/8" thick aluminum wall construction with inside mounting baseplate laser cut for 4 galvanized steel anchor bolts 3/8" x 12" long.

Pre Paint
8 step degreasing with phosphoric acid deoxidizing and etching as well as a zinc and nickel phosphate process before product painting.

Sealed for Wet Locations
Provided with special interior welded watertight seams along with specific "fit for purpose" long life high temperature memory retentive silicon gaskets.

Thermal Management
6061 Extruded Aluminum is used for its excellent mechanical strength and thermal dissipation properties in low and high ambient temperatures. The superior thermal heat sink design by Evergreen used in conjunction with the driver controls thermals below critical temperature range to ensure maximum luminous flux output, as well as providing long LED service life and ensuring less than 10% lumen depreciation at 50,000 hours.

Driver
Options Available are Standard 120/277 volt, 0-10V Dimming for 120/277 volt, or Phase Dimming for 120 volt only

Finishing
All Evergreen Products go through an extensive inspection for pre-finishing prep to make sure all metal is clean and free of any defects.

Paint
UV Stabilized 4.9Mil thick powdercoat paint and backed at 400 degree F. This process ensures that Evergreen products can withstand harsh environments.
Rated for use in High Impact environments.

Hardware.
Provided Hardware is Galvanized Steel 3/8 X 12" Long Anchor Bolts complete with Washers and Nuts.

Regressed Screw Holes
Tapped holes are threaded with a special aluminum Tap Tool designed to prevent the regressed Flat Head screws from stripping out or being tightened flush with the bollard body.

High Impact Acrylic Lens.
Manufactured with Ulta High Impact, Naturally UV Stabilized Virgin Acrylic.

Optics & LED
Precise optic design provides exceptional light control and precise distribution of light.
LED CRI - 90

Lumen - Maintenance Life
L80 / B10 at 50,000 hours (This means that at least 90% of the LED's still achieve 80% of their original flux)

Standard Options

Lamp

20w LED

Finish Powdercoat Color

AB - Architectural Bronze
TBR - Textured Bronze
ORB - Oil Rubbed Bronze
MBK - Matte Black
TBK - Textured Black
GBK - Semi Gloss Black
TR - Textured Rust
MW - Matte White
GW - Gloss White
TW - Textured White
MG - Metallic Grey
MN - Metallic Nickel
SB - Satin Brass
CH - Chrome
TVP - Textured Verde Patina
GV - Gold Vein
CV - Copper Vein
SV - Silver Vein

Acrylic Lens

WF - White Frosted
CA - Clear
CFA - Clear Frosted

LED Color

27K - 2700K
30K - 3000K
35K - 3500K
41K - 4100K
50K - 5000K

Options (Adder)

EM - Emergency Battery Backup
MS - Motion Sensor
GFCI - GFI Receptacle & Cover
DIM - 0-10V Dimming
PDIM - Phase 2 Wire Dimming (120 volt only)
590 - 590nm LED chips (Turtle)
CSM - Custom Modifications
CBPLT - Custom Baseplate

Ordering Example: LM-BOL8X3-20W-MBK-CA-32"-DIM-30K

Model	Lamp	Finish	Lens	LED Color	Options

PERFORMANCE

Delivered Lumens - 2002
Type II Distribution
Bug Rating B1-U0-G0

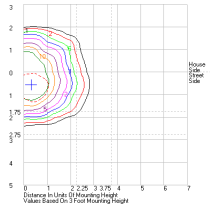

Zoom ISO to 600%

PROJECT: DATE: QUANTITY:

TYPE: NOTE:

Head Office:
1379 Ridgeway Street
Pomona, CA 91768
Tel: 909-865-5599
Fax: 909-865-5539
www.evergreenlighting.com

Intertek

Evergreen Lighting USA reserves the right to change specifications without prior notice, please contact factory for latest information. Due to the continual improvements in LED technology data and components may change without notice.